Extending the reach of LANs

- Where there is a need to *extend* or *interconnect* LANs three devices can be used:
  - *Repeaters:*
    - Used to interconnect *identical* LANs i.e. LANs using the same MAC protocols (e.g. conforming to IEEE 802.3 **or** 802.5 etc.).
    - Repeaters do not process frames.
  - *Bridges*:
    - Used to interconnect LANs that use similar or different MAC protocols (e.g. IEEE 802.3 **and/or** 802.5 etc.).
    - Bridges do process frames.

Extending LANs - contd.

- *Routers*: Similar to bridges but with extra functionality i.e. used to interconnect *different* LAN technologies. To be examined later under the topic *Internetworking*

Repeaters

- Repeaters are used to overcome the distance limitation of LANs:
  - Recall that transmission signals attenuate over distance.
  - The length of a LAN segment is restricted to address attenuation e.g. a 10Base5 LAN has a length restriction of 500m.
  - When there is a need to interconnect stations beyond this distance, a *Repeater* can be used.
- A Repeater connects *segments* of a LAN:
  - It does <u>not</u> connect two LANs i.e. unique addressing is still required.
- Basic functionality:
  - Repeaters regenerate attenuated bits. For each bit received a fresh signal is reproduced.
  - Repeaters forward every frame <u>without</u> filtering.

Repeater Implementation

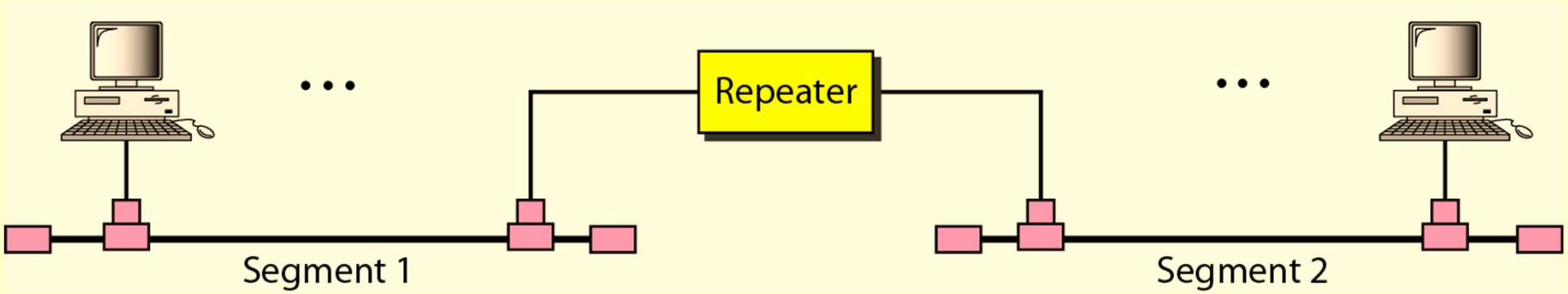

Bridges

- Bridges facilitate the interconnection of **small** LANs to create **one** large LAN:
  - This is preferable to creating a single large LAN.
- Advantages of using small *interconnected* LANs:
  - *Reliability*: The effects of a fault can be contained and restricted to only a few stations.
  - *Performance*: Smaller LANs provide better performance to locally attached devices. This ties in with the *Principal of Locality of Reference*:
    - The *majority* of traffic is often between locally connected stations.

Bridges – contd.

- *Security*: With some LAN topologies such as Bus and Wireless LANs <u>all</u> stations can potentially see <u>all</u> frames. The use of a Bridge facilitates the *physical* isolation of high security traffic <u>and</u> users with special security access.
- *Geography*: It facilitates extending a LAN to isolated clusters of stations using long distance communications links e.g. microwave links, satellite links etc.

- The next slide shows a typical implementation of a Bridge connecting <u>two</u> LANs:
  - However, Bridges can interconnect more than 2 LANs.

Bridge Implementation

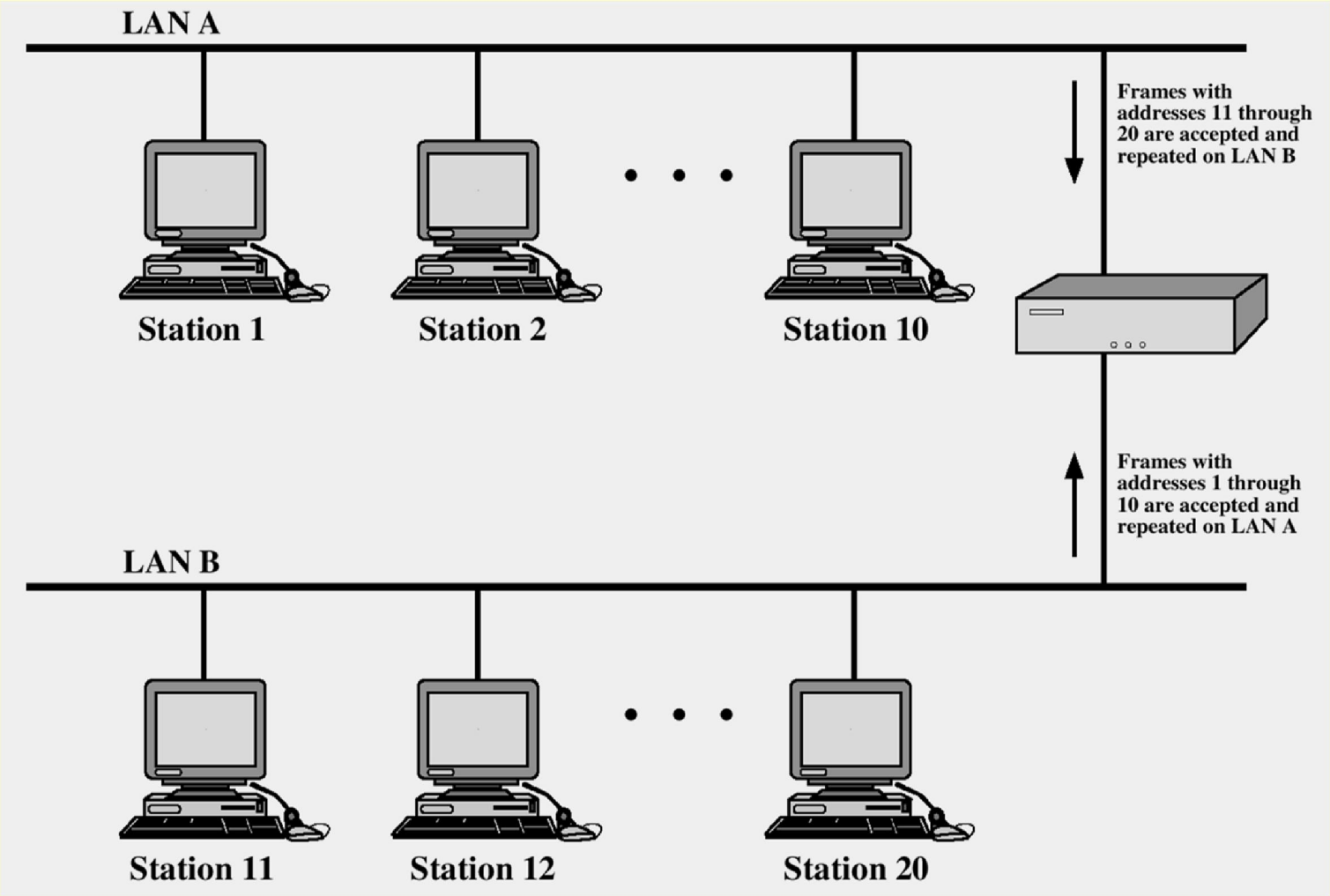

Functions of a Bridge

- Basic Bridges only understand one frame format e.g. 802.3, 805.5 etc. These are sometimes called *MAC Relay Bridges.*
- *Basic Bridges* provide the following functionality:
  - *Store and Forward*:
    - Operating in *promiscuous mode* a Bridge reads all frames transmitted on one LAN.
    - It retransmits frames to an outgoing port to which another LAN is connected only if the destination station is on that LAN.
    - The retransmission is done without modification to the frame i.e. *bit-by-bit.*
    - This function is performed in both directions.
  - *Routing and Addressing*:
    - Not all frames are copied. Only those relevant to a particular LAN segment are copied. This implies a **routing** capability.

Functions of a Bridge

- The use of a bridge <u>does not</u> affect how stations communicate with each other:
  - *Unique MAC addresses* are used for routing frames between stations connected to the same bridged network.
- A *routing strategy* is used to decide which frames are <u>forwarded</u> onto another LAN.
- There are two *routing strategies* to consider:
  - *Fixed routing.*
  - *Address Learning.*

Fixed Routing Strategy

- Fixed routing:
  - For <u>each</u> pair of *source-destination* station a route is created in a *routing table* stored on the bridge.
  - Based on the destination address in a received MAC frame the bridge performs a <u>lookup</u> of the routing table to determine if the frame is to be forwarded.
- Advantages/Disadvantages of *fixed routing*:
  - *Simplicity.* Requires <u>minimal</u> processing overhead. However, this can become very complicated if multiple bridges are used.
  - Requires a lot of manual intervention when more stations/bridges are added or removed.

Example Bridge Routing Table

Address	Port
71:2B:13:45:61:41	1
71:2B:13:45:61:42	1
64:2B:13:45:61:12	2
64:2B:13:45:61:13	2

Bridge Table

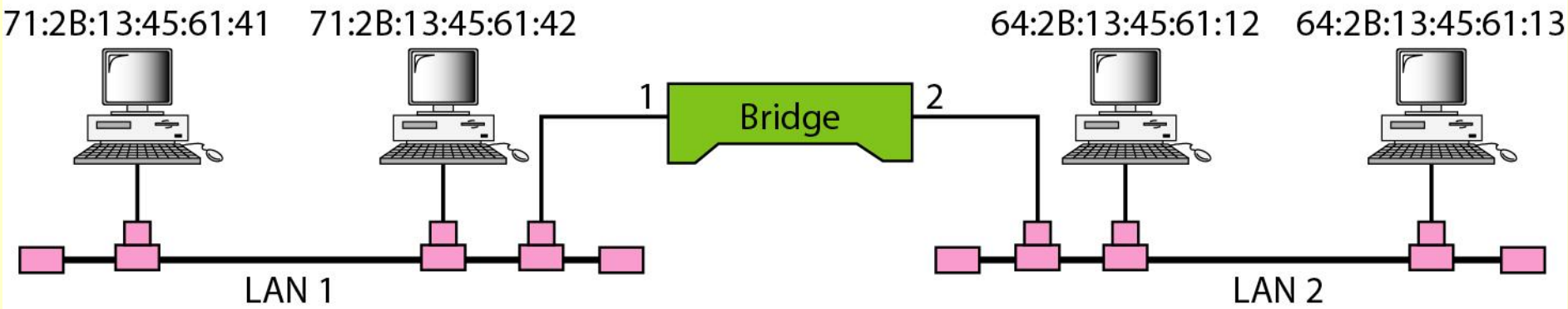

Address Learning Routing Strategy

- *Address Learning* is an alternative approach to routing.
- Here the Bridge can *learn* the location of each station <u>automatically</u> because:
  - Each incoming MAC frame contains a *source address* field.
  - Each LAN attaches to one *port* only.
- Using both of these identifiers the bridge constructs a *routing table* automatically i.e. without manual intervention.
-

Address Learning Routing Strategy

- Address learning starts at boot-up time :
  - Initially the routing table is empty.
  - As MAC frames arrive on any of the incoming ports, the Bridge checks the routing table for the destination address:
    - No entry: the source MAC address/source port information are recorded and, the frame is broadcast to all other ports.
    - Already exists: the frame is routed to the correct outgoing port
- After a period of time known as the ***steady-state*** period the table is complete:
  - ***Frame filtering*** can commence in earnest for all incoming frames.

Address Learning Process

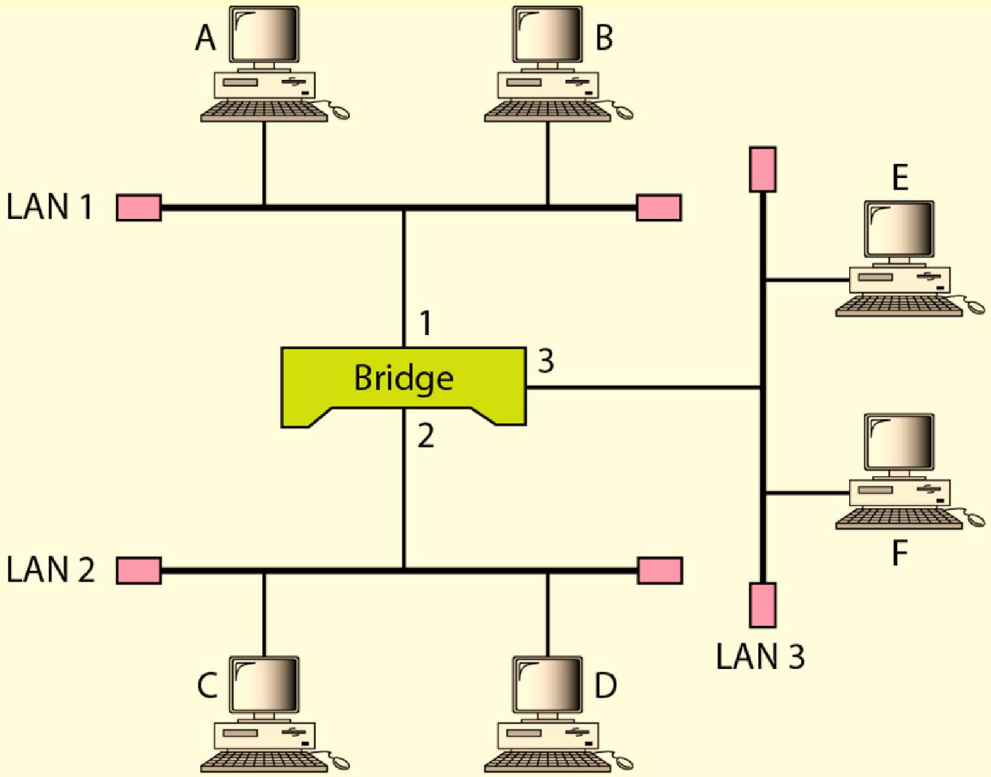

Address	Port

a. Original

Address	Port
A	1

b. After A sends a frame to D

Address	Port
A	1
E	3

c. After E sends a frame to A

Address	Port
A	1
E	3
B	1

d. After B sends a frame to C

Address Learning Routing Strategy

- Bridges that use an address learning strategy are known as ***Transparent Bridges***:
  - Stations connected to the LAN are unaware of the existence of the bridge.
- A problem with Transparent Bridges is ***Looping***:
  - Arises from the use of *redundant bridges,*
  - Redundant bridges are often used for reliability in the event that one bridge fails; another bridge can take over.
- Redundant bridges can create loops within the network as follows:

Bridge Loops

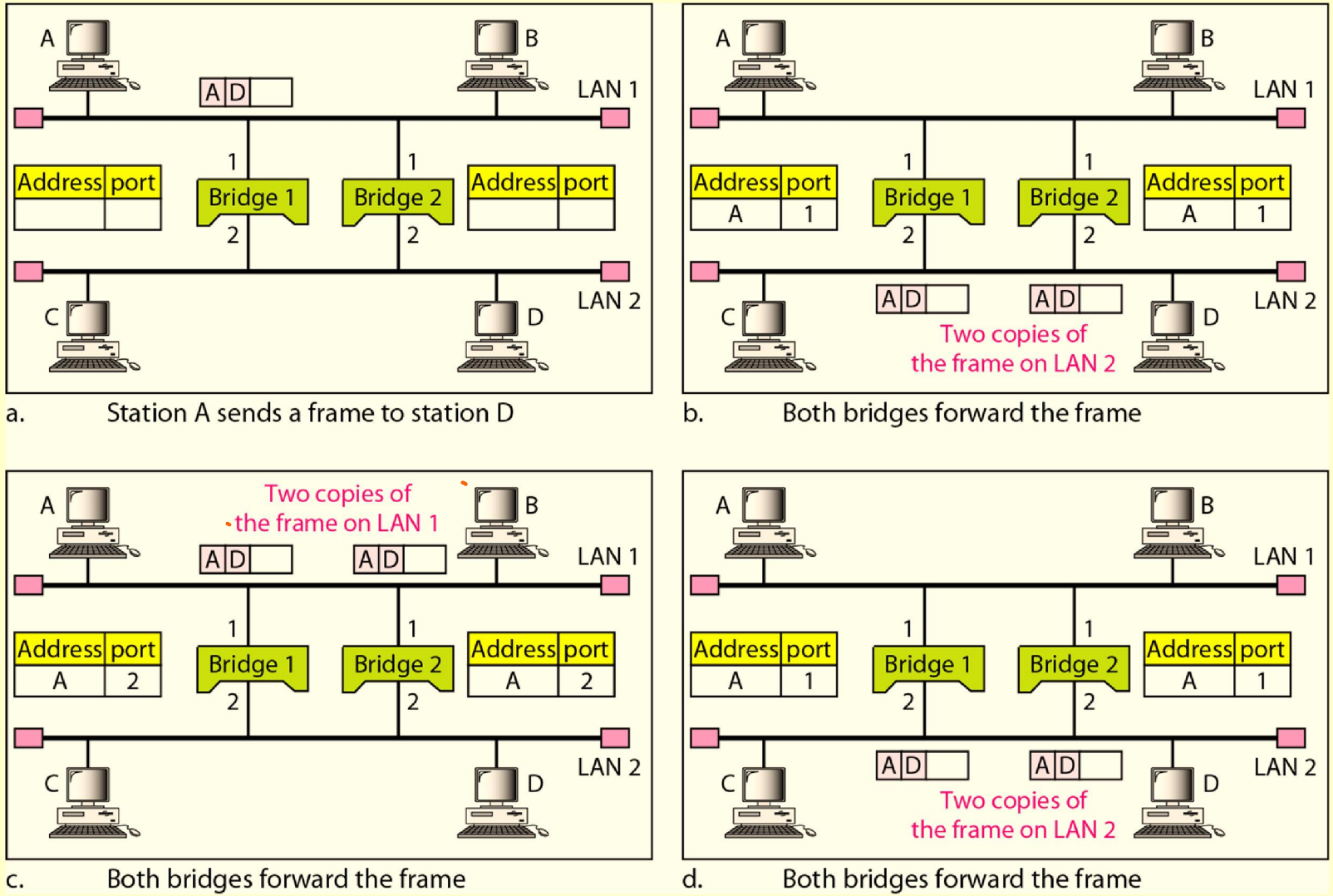

a. Station A sends a frame to station D

b. Both bridges forward the frame

c. Both bridges forward the frame

d. Both bridges forward the frame

Overcoming Bridging Loops

- Graph theory is used to create a loop-free bridge network:
  - A *Spanning Tree* is a graph in which there is no loop.
- To create a *Spanning Tree* the network is represented as a graph:
  - Here the graph ***nodes*** represent the bridges <u>and</u> the LANs to which they connect,
  - The connecting ***arcs*** represent the <u>connections</u> between a LAN(s) and a bridge(s),
  - Each arc is a assigned a *cost metric* (‘1’ in the direction of a bridge to a LAN and, ‘0’ for the opposite direction)

An example Bridged Network

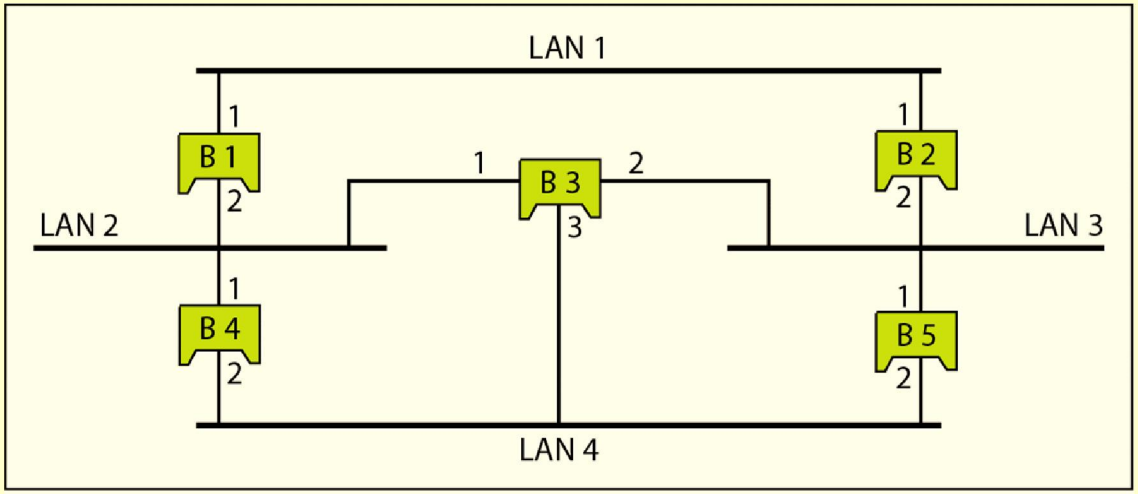

a. Actual system

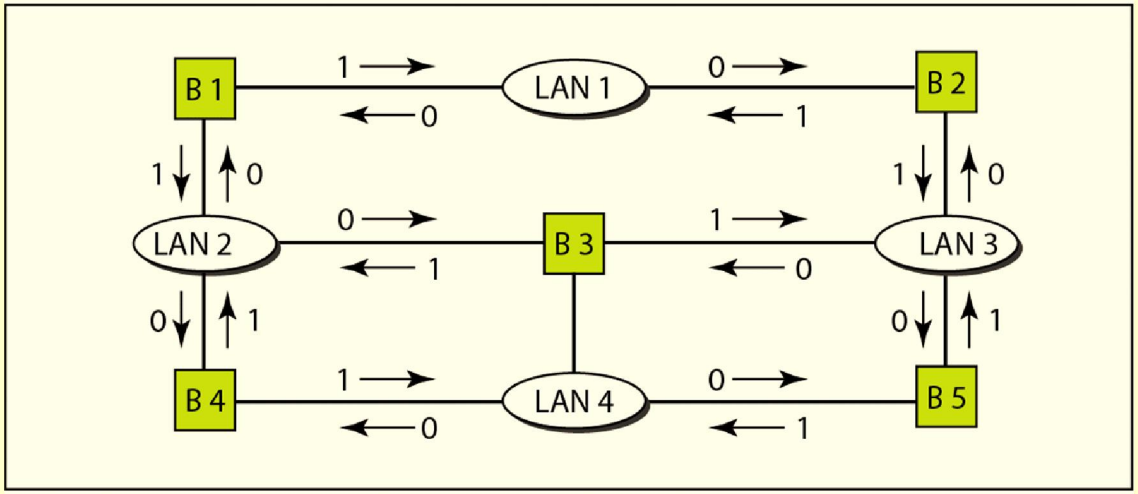

b. Graph representation with cost assigned to each arc

Overcoming Bridge Loops

- Finding the Spanning Tree involves three steps:
  1. Identify the ***Root Bridge***. The bridge with the lowest value ID (usually the Bridge serial number) is designated the Root bridge (**B1** in the following example),
  2. Find the *shortest path* from the Root Bridge to every other bridge and LAN in the network,
  3. Eliminate redundant routes. The routes with the shortest paths become the spanning tree.
- All bridge ports in the spanning tree are marked as *forwarding ports*:
  - All other ports are marked as *blocking ports*.

Finding the Shortest Path

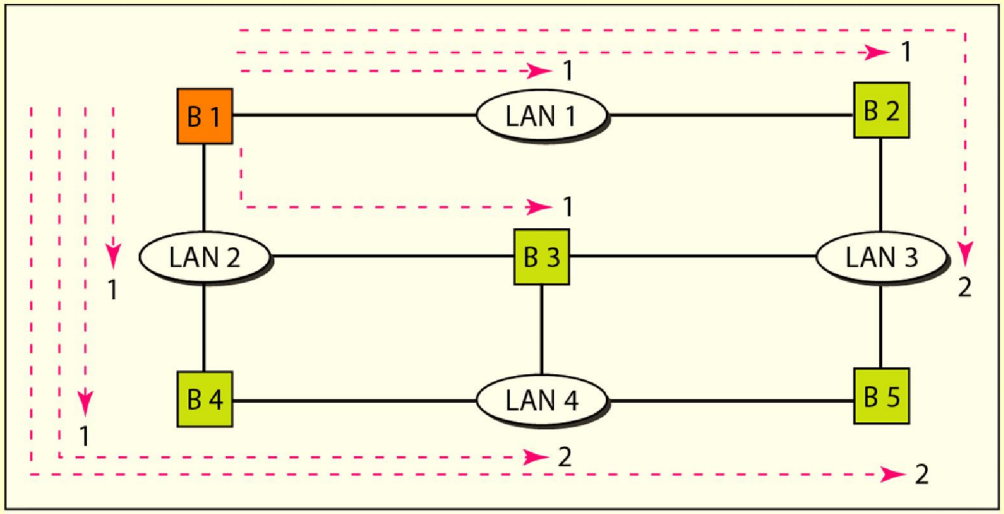

a. Shortest paths

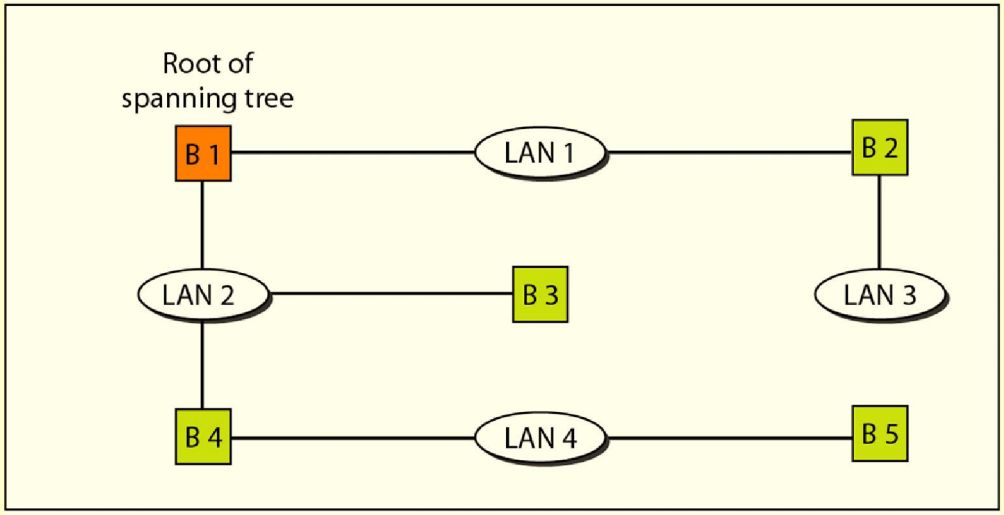

b. Spanning tree

A loop-free Bridged Network

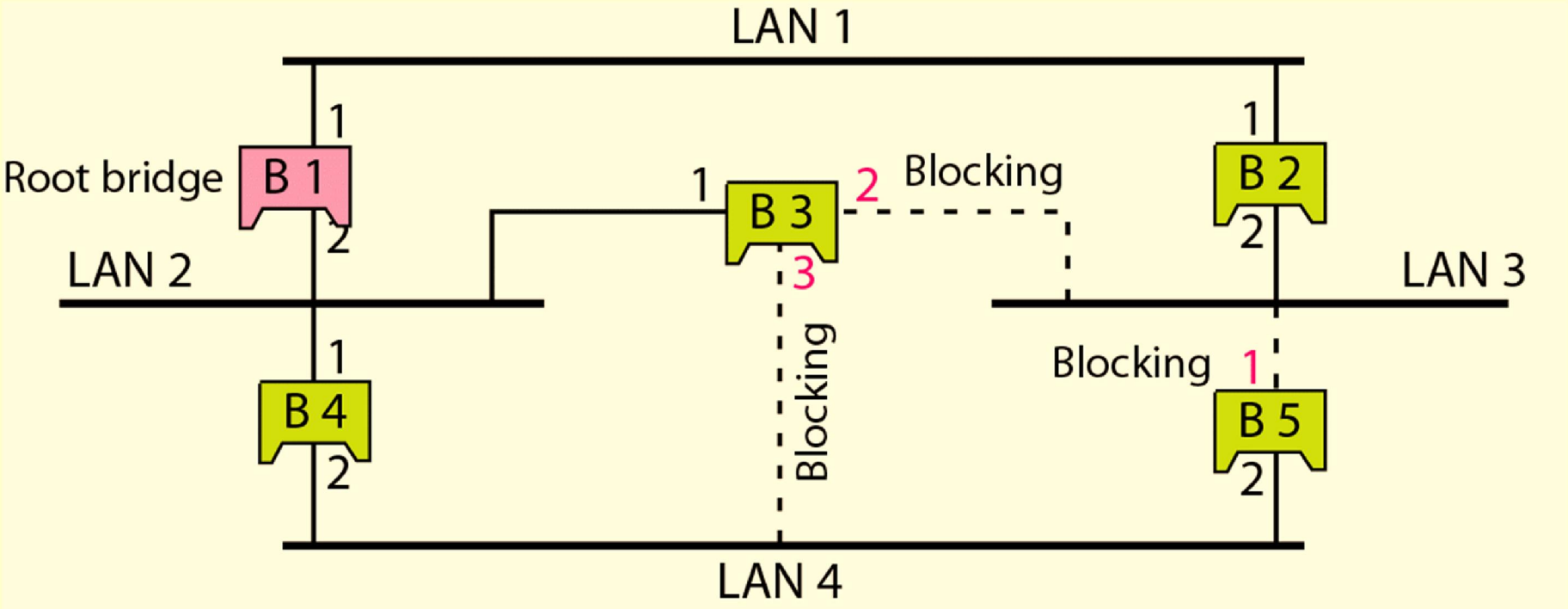

Ports 2 and 3 of bridge B3 are blocking ports (no frame is sent out of these ports).
Port 1 of bridge B5 is also a blocking port (no frame is sent out of this port).

A loop-free Bridged Network

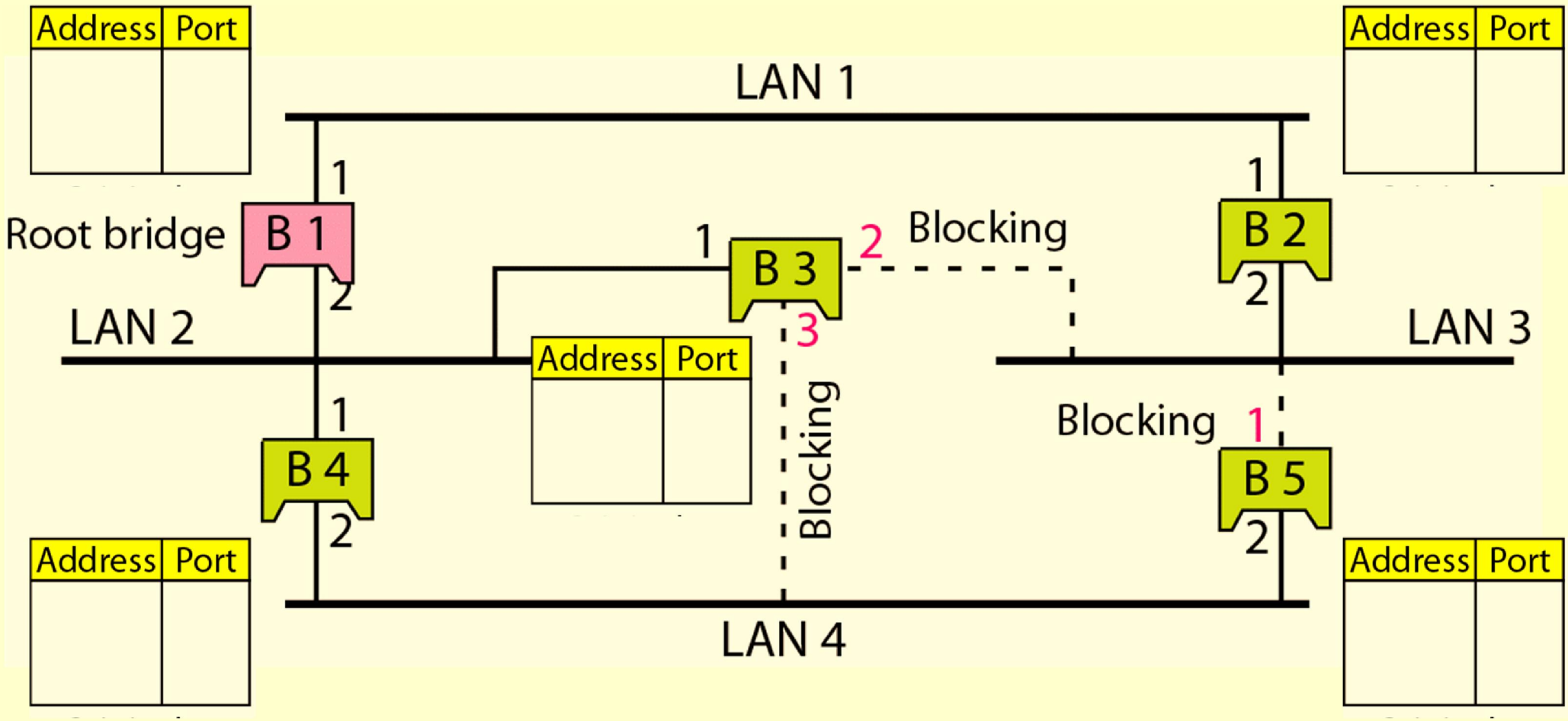

Advantages of using Bridges

- Advantages of using bridges are as follows:
  - *Parallelism*: Not every frame arriving at the bridge is copied to another LAN:
    - This allows for <u>two</u> pairs of stations to communicate simultaneously provided <u>each</u> pair is on a separate LAN and separated by a bridge.
  - *Optimized performance*:
    - Stations that are likely to communicate with each other frequently can be moved to the same LAN to ensure adherence to the *Prinicipal of Locality of Reference.*
    - *Collision Domains* are smaller, reducing the likelihood of collisions occurring.

Optimized performance and *Parallelism*

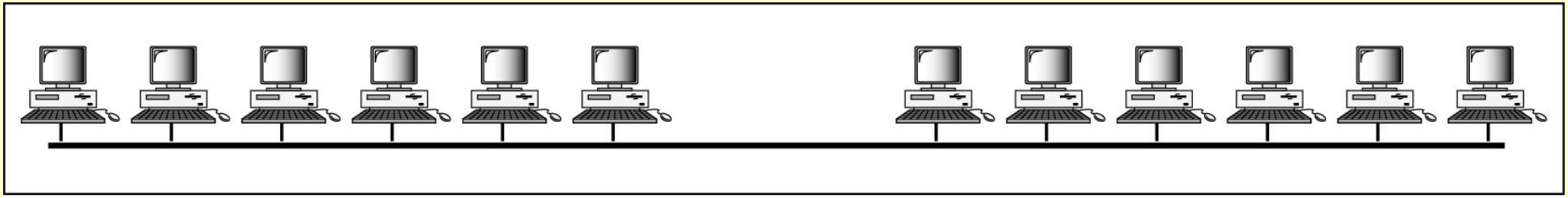

a. Without bridging

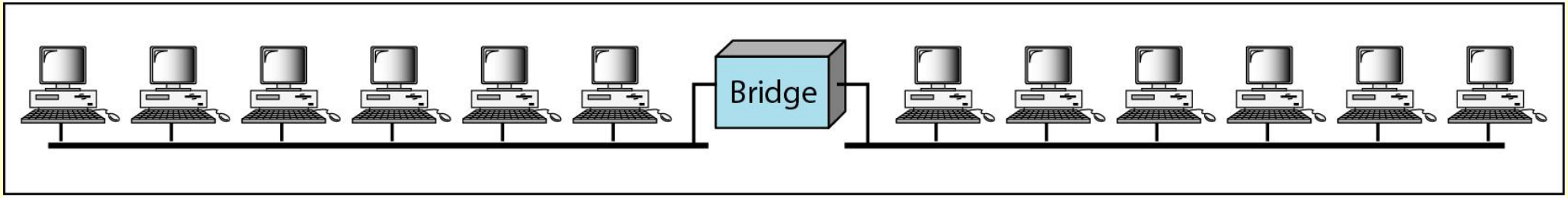

b. With bridging

- <u>Without</u> bridging each station perceives the speed of the LAN as:
  - (LAN Data Rate) / (number of stations).
- This is significantly improved with bridging.

Collision Domains are reduced in size

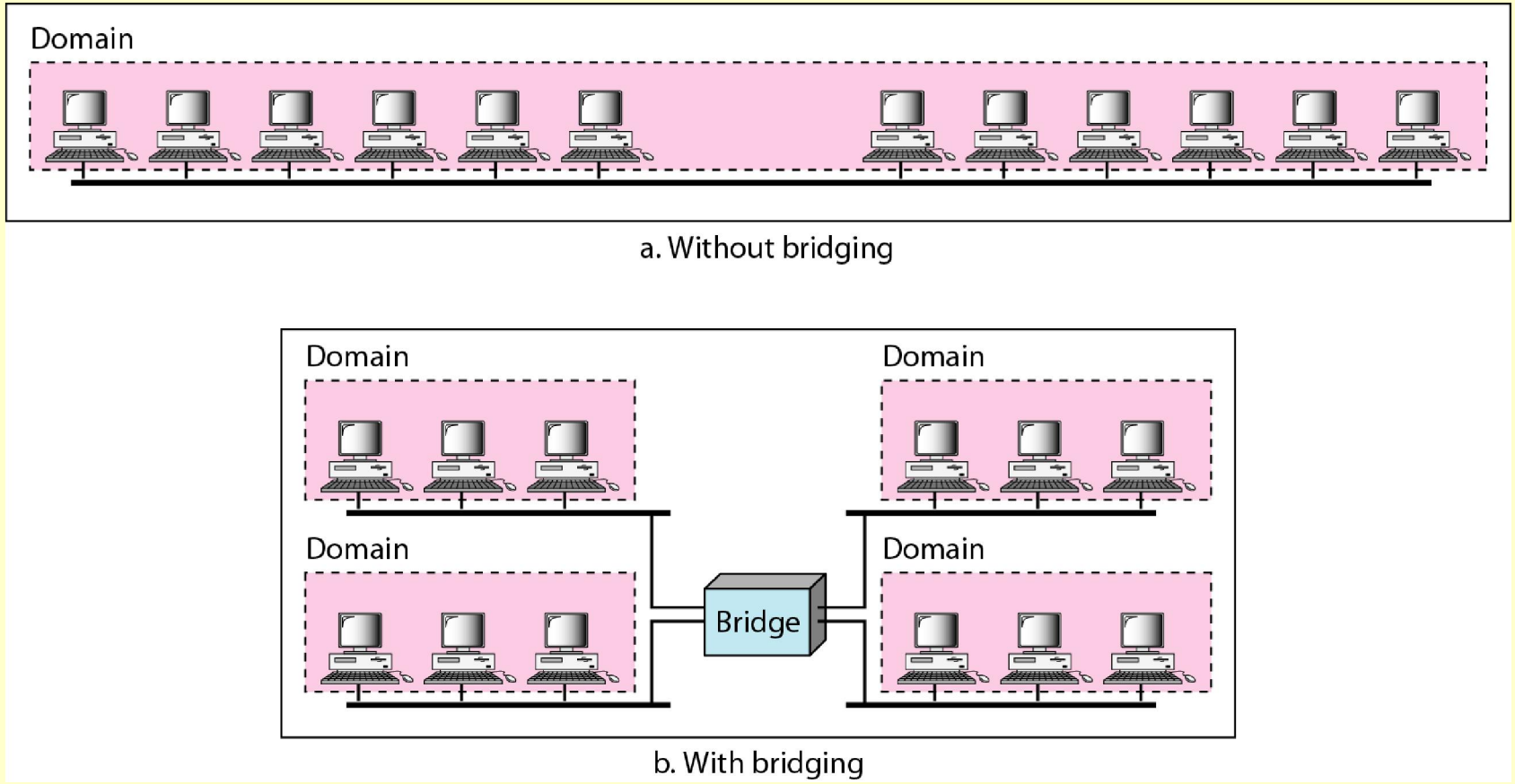

- <u>With</u> bridging the size of the collision domain is reduced and contention is therefore reduced.

Summary of Bridges

- Used to extend LANs creating small interconnected LANs rather than a single large LAN.
- Can connect LANs with similar <u>or</u> different MAC protocols.
- Contains *Routing* functionality to <u>*filter*</u> frames:
  - This facilitates *parallelism* which in turn improves *performance* of each connected LAN
  - Also, collisions are not copied between LANs which reduces the Collision Domain and improves contention ratio.
- Contains *Store and Forward* functionality:
  - Facilitates connecting fast, busy LANs to slow LANs.